CENTA

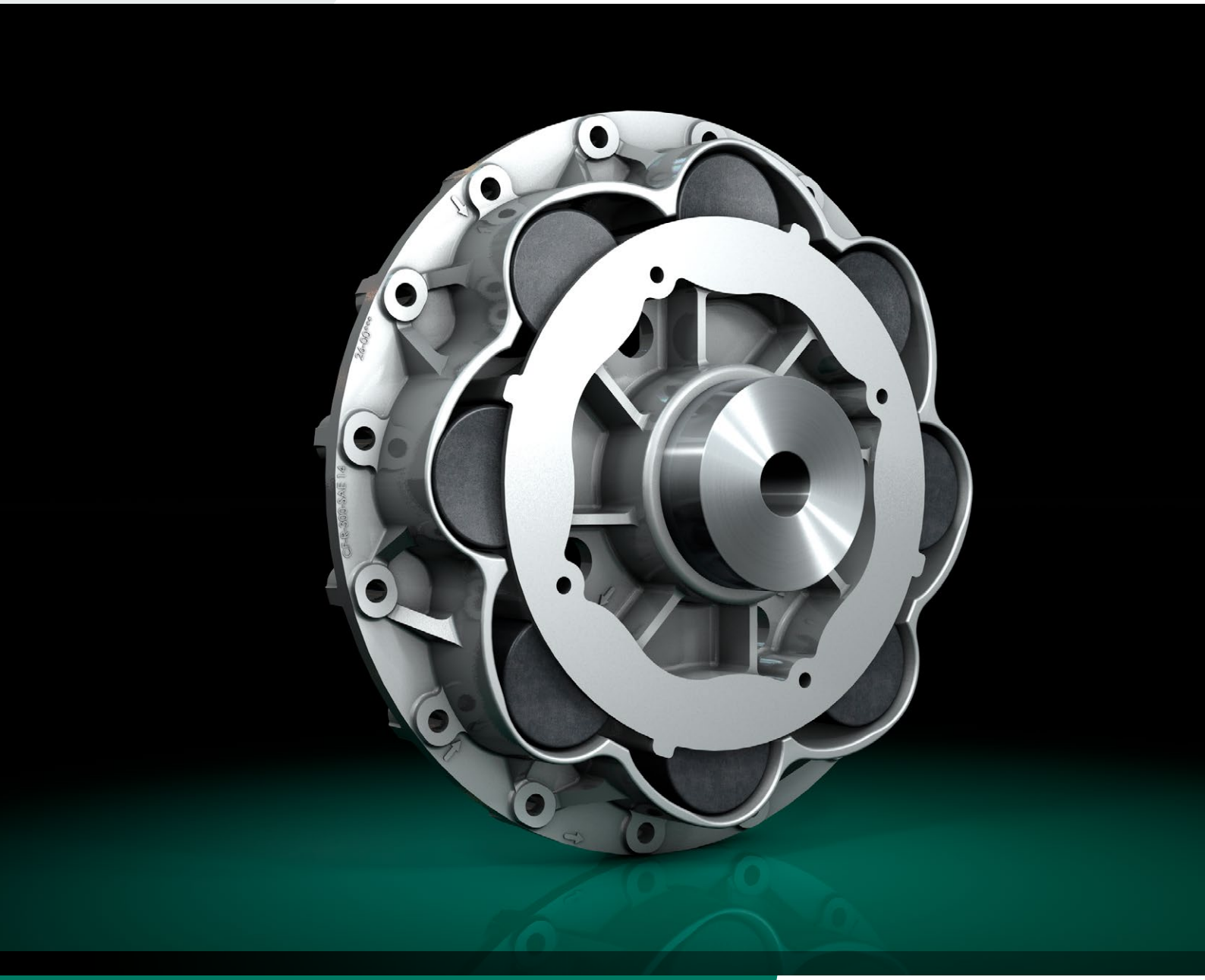

CENTAFLEX®-R

HIGHLY FLEXIBLE COUPLINGS FOR HEAVY DUTY APPLICATIONS

RegalRexnord™

CF-RS-E-06-22

CENTAFLEX®-R

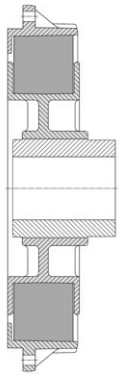

Design

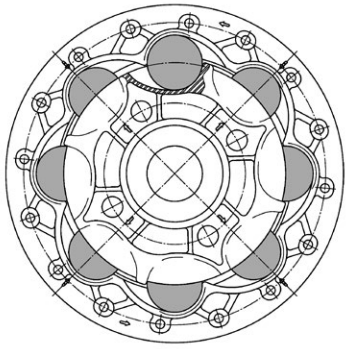

The CENTAFLEX-R is a simple robust ROLLER coupling with a progressive torsional characterisation. Ideal for boat drives, providing a very low stiffness at low torque (& speed) which shifts the torsional resonance below idle speed and prevents gearhammer (gear chatter).

And there are also numerous applications for this kind of coupling in many different industrial drives.

Using the rubber-in-compression principle with rubber rollers between cams, the coupling offers high reliability as it is free from a bonding process common in couplings of equal performance.

The associated cams are profiled using sophisticated computer design (CAD) backed by extensive physical testing.

Important features and advantages of the CENTAFLEX-series R.

- Progressive torsional characteristic with very low stiffness at low torque and increased, but moderate stiffness at high torque
- Fail safe
- Simple, reliable, no bonding, only rubber in compression
- Special developed, temperature resistant elastomer CENTALAN with high damping, suitable for high ambient temperature of more than 100°C (212°F)
- For commercial heavy duty or difficult applications we recommend the special „HD" rubber rollers, which are also oilresistant.
- Well proven in service and approved by classification societies
- High allowable energy loss by intensive inner and outer ventilation
- Suitable for blind fitting in bell housings
- Economic/easy maintainable design
- Protected by international patents
- Area of application: flange mounted units or well aligned independently mounted units on rigid mounts
- The CF-R is part of the CENTA-Antriebe family of marine drive couplings covering a range between the more than 100 000 times proven CENTAFLEX-DS (Dual Stage) series and the well established, CENTAX series up to 500 kNm.

Technical Data

Centaflex-R size	Rated torque T_K [kNm] for duty: pleasure*	intermediate	continuous	Max. torque** T_{Kmax} [kNm]	Flywheel size SAE J620	Max. speed [rpm]
94	0,25	0,20	0,17	0,75	6,5 - 165 and special	5000
104	0,53	0,425	0,37	1,59	6,5 - 165 8-200	5000 4500
106	0,80	0,64	0,56	2,40	6,5 - 165 8 - 200	5000 4500
114	0,70	0,56	0,49	2,10	11,5 - 290	4000
134	1,00	0,80	0,70	3,00	11,5 - 290	4000
136	1,60	1,25	1,11	4,80	11,5 - 290	4000
178	2,00	1,60	1,40	6,00	11,5 - 290	4000
216	3,15	2,50	2,20	9,40	11,5 - 290 14 - 355	3500 3000
268	4,25	3,40	3,00	12,50	14 - 355	3000
318	6,30	5,00	4,40	19,00	14 - 355 18 - 460	3000 2600
420	10,00	8,00	7,00	30,00	18 - 460 21 - 530	2600 2300
520	15,00	12,00	10,50	45,00	18 - 460 21 - 530	2600 2300
	*The rated torque for pleasure duty is the nominal torque T_{KN} of the coupling.			**Torque for transient conditions	Other flywheel sizes are available	For higher speeds please consult us

This table shows only the basic technical data required for coupling selection based on engine nominal torque and duty only. We can provide much more detailed technical data, which may be required for the conduction of a torsional vibration analysis. Please ask for data sheet D26-003.

Torsional Responsibility
The responsibility for ensuring torsional compatibility rests with the assembler of the drive train. CENTA cannot accept liability for gearbox noise or for damage of the coupling or other components of the drive caused by torsional vibrations. Torsional vibration analysis can be made by the engine builders, survey societies, consultants etc. or by CENTA.

Dimensional Responsibility
The dimensions on the flywheel side of the couplings are based on standards SAE J620 and DIN 6281, and special flanges. The responsibility for ensuring dimensional compatibility rests with the assembler of the drive train. CENTA cannot accept liability for interference between the coupling and the flywheel or the gearbox or for damage caused by such interference.

Please ask for an application drawing and current data before making detailed coupling selection.

CENTAFLEX®-R

Dimensions (mm)

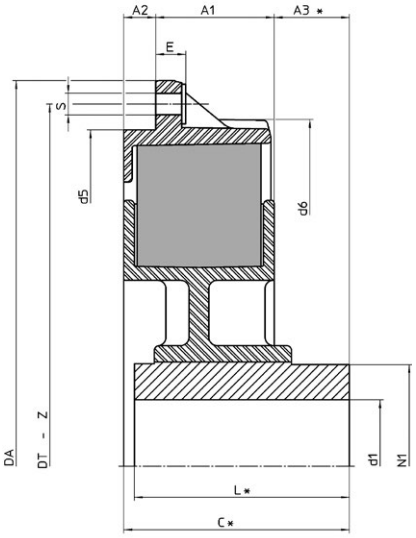

CF-R Size	d_1 min-max	N_1	L*	A_1	A_2	A_3	C*	E	d_5	d_6	SAE J620	S	Z	D_A	D_T	weight [kg]	Order Code
94	31,8	46	42	24	10	2	36	7,6	148	148	6,5-165	9	6x60°	215,9	200	1,7	026S-00094-0006
104	25,4-31,8	44	54	44 42	- 2	-6,5	37,5	16,4 12,4	-	209	6,5-165 8-200	9 11	6x60°	215,9 263,5	200 244,5	1,0 1,1	026S-00104-0006 026S-00104-0008
106	25,4-31,8	44	55	44 42	- 2	-6,5	37,5	16,4 12,4	-	209	6,5-165 8-200	9 11	6x60°	215,9 263,5	200 244,5	1,1 1,2	026S-00106-0006 026S-00106-0008
114	16-40	48	67	20,5	24,5	22	67	9,5	208	208	11,5-290	11,5	8x45°	352,4	333,4	2,7	026S-00114-0011
134	31,8-50	70	52 46	41 25	4 22	11 5	56 50	12 12	255 251	256 255	10-255 11,5-290	11,5	8x45°	314,3 352,4	295,3 333,4	3,8 3,8	026S-00134-0010 026S-00134-0011
136	31,8-50	70	52 46	41 23	4 22	11 5	56 50	12 12	255 251	256 255	10-255 11,5-290	11,5	8x45°	314,3 352,4	295,3 333,4	4	026S-00136-0010 026S-00136-0011
178	30-60	85	115	51,3 37,1	-3 11,2	64	109	36 248	- 306	305	11,5-290 14-355	11,5 13,5	8x45°	352,4 466,7	333,4 438,2	7,0 7,5	026S-00178-0011 026S-00178-0014
216	30-60	95	140	79 65,5	- 13,5	78,5	154	42 29	- 313	313	11,5-290 14-355	11,5 13,5	8x45°	352,4 466,7	333,4 438,2	12,0 13,4	026S-00216-0011 026S-00216-0014
268	40,90	123	115	75 65,3	- 9,7	48,5	121,5	37,5 3	409	420	14-355 18-460	13,7 17	8x45° 12x30°	466,7 571,5	438,2 542,9	17,5 20,6	026S-00268-0014 026S-00268-0018
318	40-90	123	130	93 83,3	- 9,7	45,5	136,5	37,5 3	- 407	420	14-355 18-460	13,5 17	16x22,5° 12x30°	466,7 571,5	438,2 542,9	20,8 24,2	026S-00318-0014 026S-00318-0018
420	40-115	160	197	95,35	-	90,3	184	39 5	-	511	18-460 21-530	17	12x30°	571,5 673,1	542,9 641,4	39,5 47,0	026S-00420-0018 026S-00420-0021
520	60-130	160	134	134	-5	97	226	56	-	517	18-460 21-530	17	12x30° 24x15°	571,5 673,1	542,9 641,4	55,2 59,4	026S-00520-0018 026S-00520-0021

* dimensions **C** and **L** can be shortened

Design variations

Standard flange designs are based on SAEJ620c flywheels but special sizes are available upon request.

All shaft designs can be accomodated as the hubs are made of high grade steel and splined, tapered (including oil injection fitted) and parallel shafts can be designed.

Detailed drawings of customized couplings for all important marine gear series are available on request.

Fixed or floating splined input shafts can be accomodated, as the floating spline design has an integral axial location with thrust capacity. Both designs are of the same overall dimensions.

Couplings are uni-directional based on CCW rotation (viewing the flywheel), however sizes 420 and 520 are also available for CW rotation.

The fail safe feature can easily be removed, if it is not wanted.

Application examples:

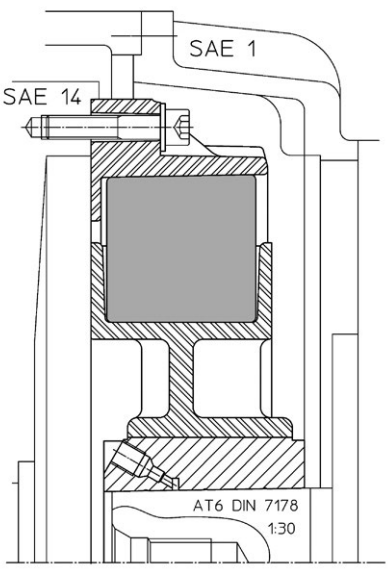

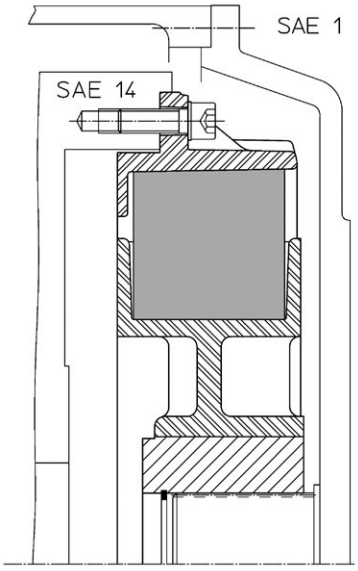

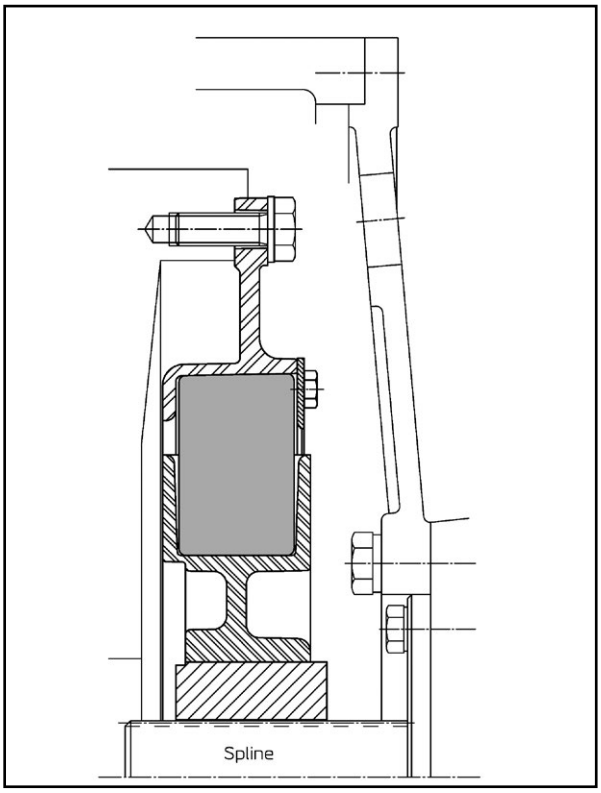

For small gears with splined input shaft, on which the coupling can float axially, a steelplate on the outer flange holds the coupling together axially (sizes 94, 114, 134, 136)

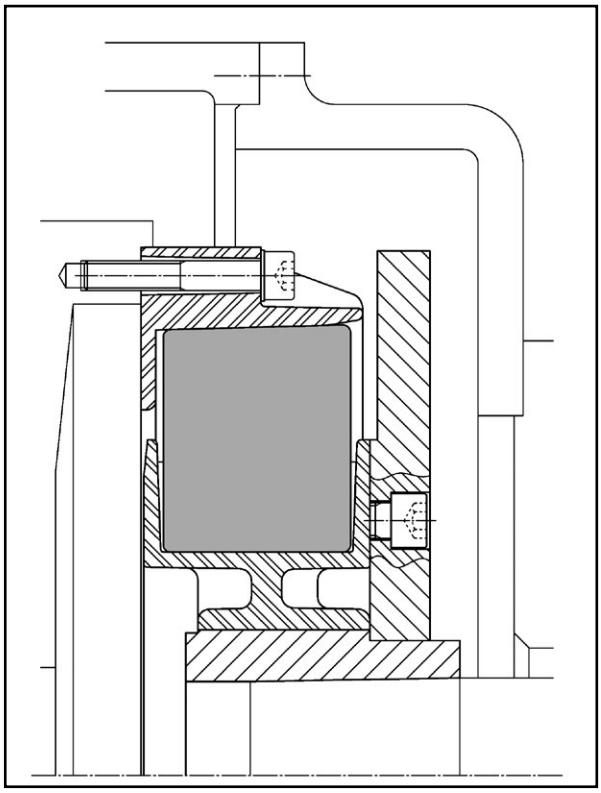

If required by the torsional situation, a steel disc as additional secondary inertia can be added.

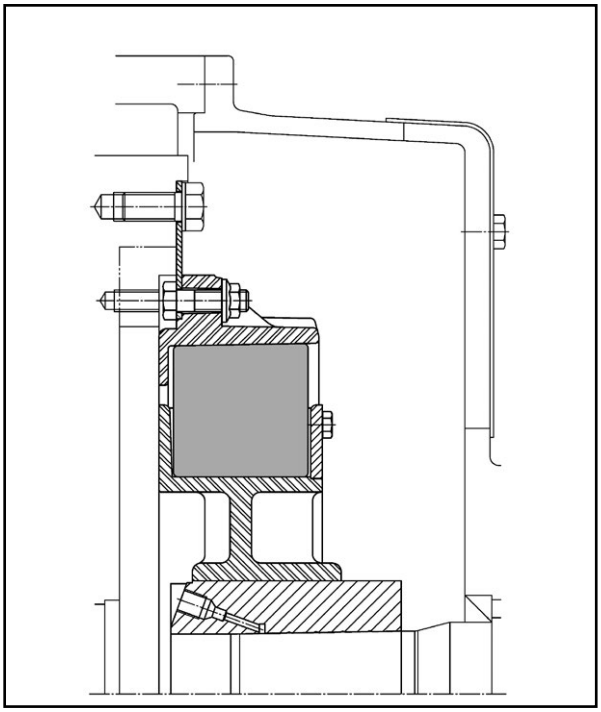

Coupling design for exchange of rollers, normal working conditions.
This design is also suitable for free standing, non flanged gears, provided the engine is on rigid mounts and well aligned.

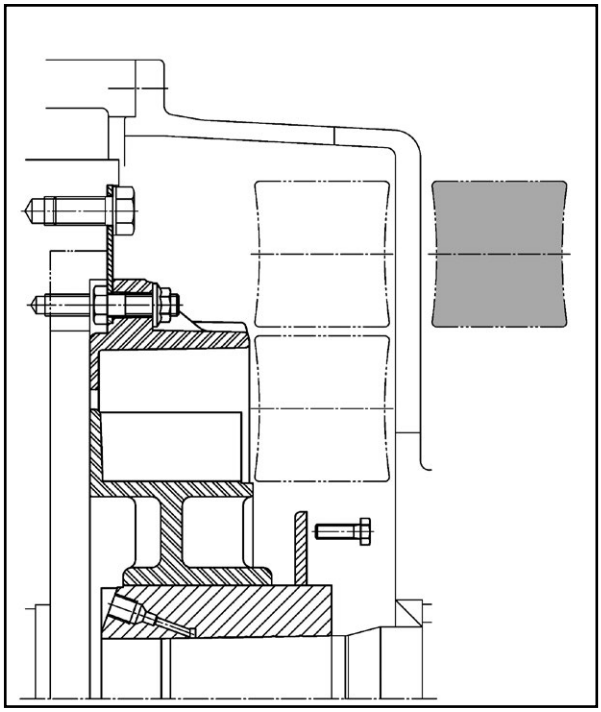

Exchange of rollers.
The side plate of the output hub can optionally be bolted on and off. This feature allows easy and quick change of the rubber rollers in situ as well on free standing gears and on flange mounted gears, provided the bell housing offers sufficient space and large enough openings. CENTA can also deliver a spacer for the bell housing in order to provide the necessary space.

Motion Control Solutions
CENTA Antriebe Kirschey GmbH

Bergische Strasse 7
42781 Haan
Germany

+49-2129-912-0 Phone
+49-2129-2790 Fax

Contact us: centa.de@regalrexnord.com

regalrexnord.com
www.centa.info